HOWARD LIGHTING PRODUCTS

Emergency Light

10/22/2013

Project:	
Catalog#:	
Approved by:	

Recessed Emergency Light

Features

- Durable steel construction
- Flush mount with drop-thru ceilings
- UL listed for dry locations & meets UL924, NFPA 101 Life Safety Code, NEC, OSHA, Local and State Codes

Electrical

- Dual 120V/277V voltage
- Charge rate/power "ON" LED indicator light and push-to-test switch for mandated code compliance testing
- LVD (low voltage disconnect) prevents battery from deep discharge
- 6V sealed lead acid, maintenance-free, rechargeable battery
- Internal solid-state transfer switch automatically connects the internal battery to lamp heads for minimum 90-minute emergency illumination
- Fully automatic solid-state, two-rate charger initiates battery charging to recharge a discharged battery in 24 hours

Model #	Input Watts (W)		Input Amps (A)	
	120V	277V	120V	277V
HLR-7	5.0	5.0	0.05	0.03

Illumination

- Two fully-adjustable 6V, 5.4W par type lamp heads
- High-performance chrome-plated metal reflectors and plastic lens for optimal light distribution

Housing

- Trim securely attached to housing with spring clips
- Durable 20 gauge steel trim plate in white or black finish

Mounting

- Bar hangers on the back box for recessed mount
- Compatible with drywall or drop ceiling mount installations
- Bar hangers included

Dimensions

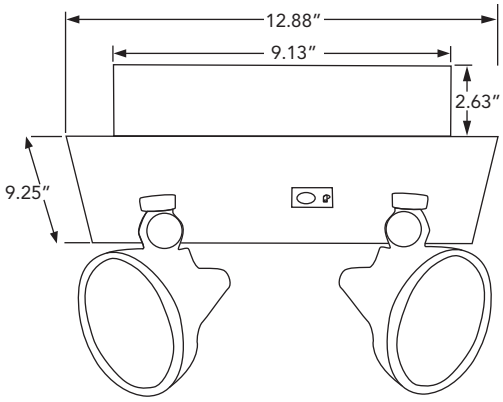

ORDERING INFORMATION						
Catalog Number	Finish	Options	Emergency Operation	Number of Heads	Lamp Wattage	Battery Voltage
HLR-7	Blank - White B - Black	Blank - None SDT - Self Diagnostic Testing	90+ minutes	2	2x 6V/5.4W	6V
example model# HLR-7						

Specifications subject to change without notice.

UL LISTED

Howard Lighting Products | 580 Eastview Drive | Laurel, MS 39443
(toll free) 800.956.3456 | (direct) 601.422.0033 | (fax) 601.422.1652
www.HowardLightingProducts.com